GUIDE TO MONITORING OF AZZURRO ZCS SYSTEMS

Zucchetti Centro Sistemi S.p.A. - Green Innovation Division
Via Lungarno, 248 - 52028 Terranuova Bracciolini - Arezzo, Italy
tel. +39 055 91971 - fax. +39 055 9197515
innovation@zcscompany.com - zcs@pec.it – **www.zcsazzurro.com**

Pile Reg. IT12110P00002965 - Share Capital € 100,000.00 fully paid up
AR Company Reg. no. 03225010481 - REA AR no. 94189
ISO 9001 Certified Company - Certificate no. 9151 - CNS0 - IT-17778

Identification: MD-AL-GI-00
Rev: 4.0 of 02/11/2020 - Application:

Table of Contents

1. Internal Wi-Fi card

1.1. Installation

The installation of an internal Wi-Fi card is only required for single-phase photovoltaic inverters from the Azzurro 1PH 1100TL - 3000TL-V1 and 1PH 3000TLM - 6000TLM-V1 range not equipped with on-board Wi-Fi card.
The 3000SP V1 storage inverter always comes with an internal Wi-Fi card.

In order to monitor the inverter, the RS485 communication address must be set to 01 directly from the display.

Installation tools:

- 5-mm Allen key
- Internal Wi-Fi card

To view the "Warranty Terms and Conditions" offered by ZCS Azzurro, please refer to the documentation inside the product box and on the website www.zcsazzurro.com.

1) Switch off the photovoltaic inverter by first disconnecting the AC line via the appropriate wall switch and then the DC line via the appropriate wall switch.
2) Unscrew and remove the four Allen screws on the front panel of the inverter using a 5 mm screwdriver.

Figure 1 – Position of the four Allen screws securing the front cover

3) Lift the front cover of the inverter using a screwdriver if necessary to lever the aluminium casing open; during this operation, be careful not to move the front cover too far from the body of the inverter, as it is still connected via the flat cable.

4) Lift the cover up as far as the flat cable allows it, and open the hooks connecting the flat cable to the terminal on the inverter's communication board, so that both the cable and front cover can be removed.
   Be sure to correctly open both plastic hooks before removing the cable.

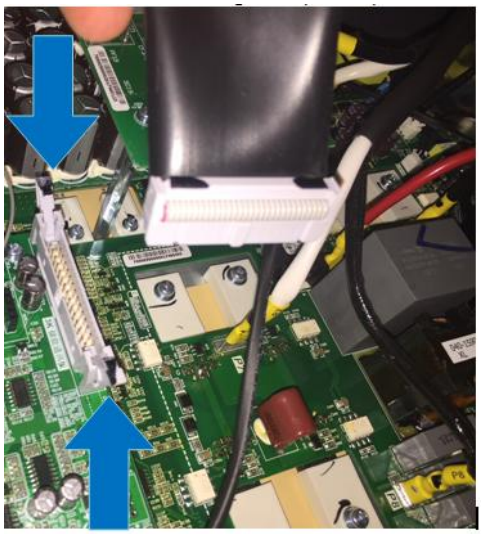

Figure 2 – Opening of the hooks on the slot of the flat connector

5) Insert the Wi-Fi card into the dedicated slot on the communication board, which is also marked by an outline, as shown in the following image.

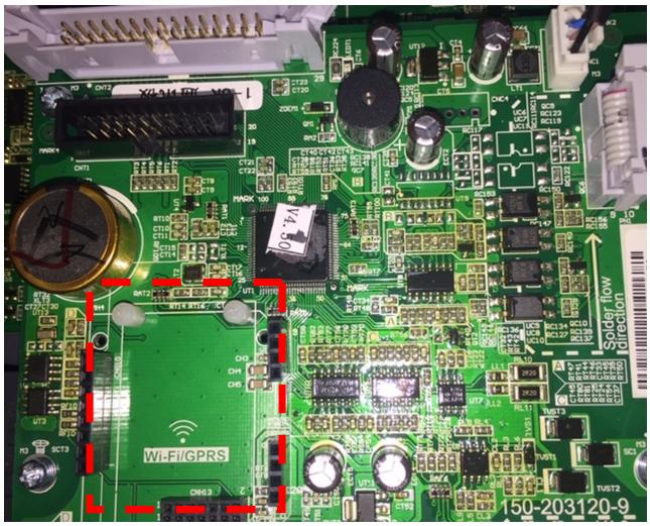

Figure 3 – Position of the Wi-Fi card on the communication board

Make sure to first insert the two plastic connectors in the slots positioned at the top, and then match the pins of the Wi-Fi card to the slots at the bottom. Press the card lightly to make sure it is mounted properly.

6) Pass the antenna connected to the card through the cable gland on the bottom of the inverter, after loosening the ring nut and removing the rubber stopper inside; finally, make sure the antenna is stable by rotating the ring nut in the opposite direction.
If, during this operation, the cable connected to the antenna detaches from the card, connect it again by placing the two connectors on top, and pressing lightly, as shown in the following image.

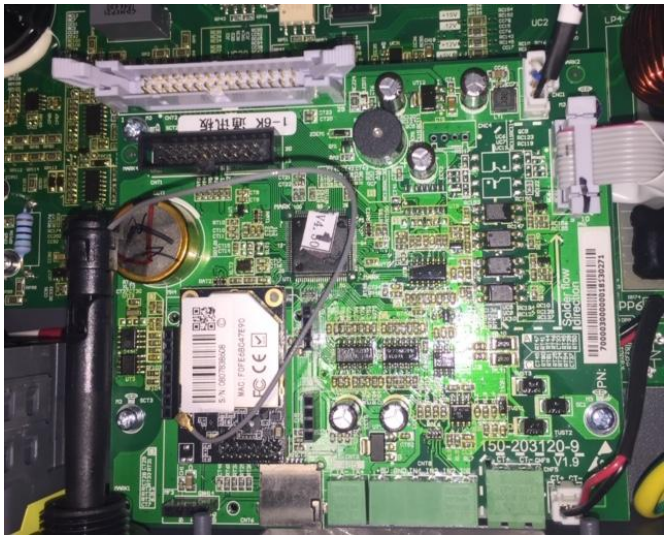

Figure 4 – Correctly installed Wi-Fi card

7) Reconnect the flat cable in its slot and close the two plastic hooks, making sure that they are closed properly. Place the front cover in its original position and secure by rescrewing the four Allen screws that were previously removed.
8) Start the inverter in the regular way as described in the manual, first supplying DC voltage and then AC voltage using the wall-mounted switches.

1.2. Configuration

Configuration of the Wi-Fi card requires the presence of a Wi-Fi network near the inverter in order to achieve stable transmission of data from the inverter card to the Wi-Fi modem.

Tools required for configuration:

- Smartphone, PC or tablet

Go to front of the inverter and search for the Wi-Fi network using a smartphone, PC or tablet, making sure that the signal from the home Wi-Fi network reaches the place where the inverter is installed.
If the Wi-Fi signal is present at the location where the inverter is installed, the configuration procedure can begin.
If the Wi-Fi signal does not reach the inverter, a system must be installed to amplify the signal and bring it to the installation location.

1) Activate the search for the Wi-Fi networks on your telephone or PC so that all the networks visible by your device are displayed.

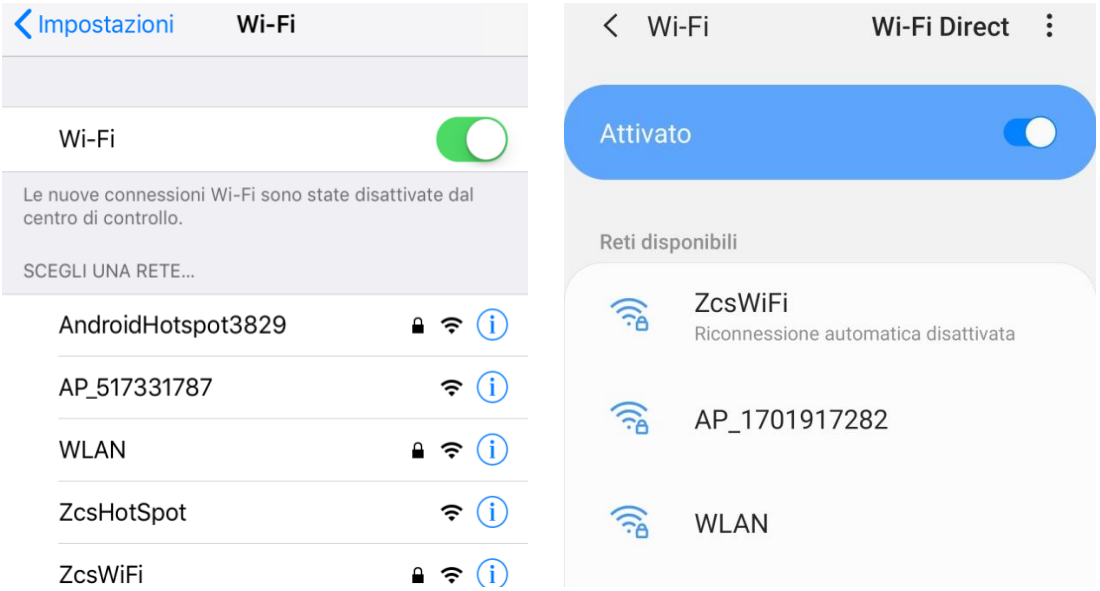

Figure 5 - Search for Wi-Fi networks on iOS smartphone (left) and Android smartphone (right)

Note: Disconnect from any Wi-Fi networks to which you are connected by disabling automatic connection.

Figure 6 - Disabling automatic reconnection to a network

2) Connect to a Wi-Fi network generated by the inverter's Wi-Fi card (i.e. AP_*******, where ******* indicates the serial number of the Wi-Fi card shown on the left side of the inverter), which operates as an access point.

3) Note: To ensure that the card is connected to the PC or smartphone during the configuration procedure, enable automatic reconnection of the AP_******* network.

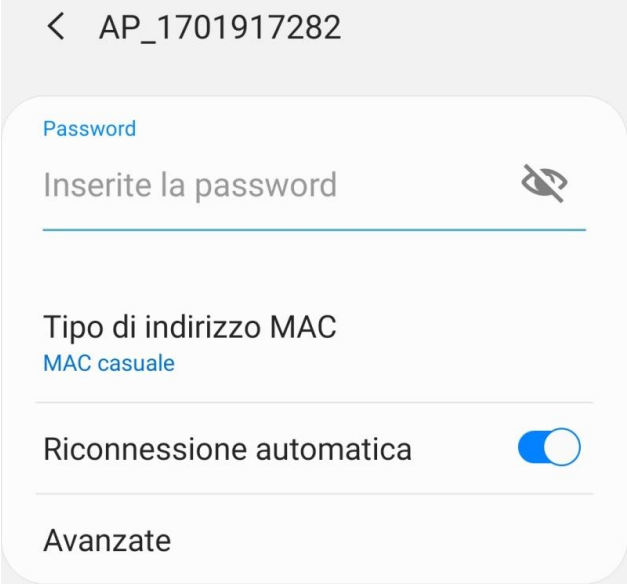

Figure 7 - Password entry prompt

Note: the Access Point is not able to provide internet access; confirm to maintain the Wi-Fi connection, even if the internet is not available.

Figure 8 - Screen indicating that the Internet cannot be accessed

4) Open a browser (Google Chrome, Safari, Firefox) and enter the IP address 10.10.100.254 in the address bar at the top of the screen.
In the box that appears, enter “admin” as both the Username and Password.

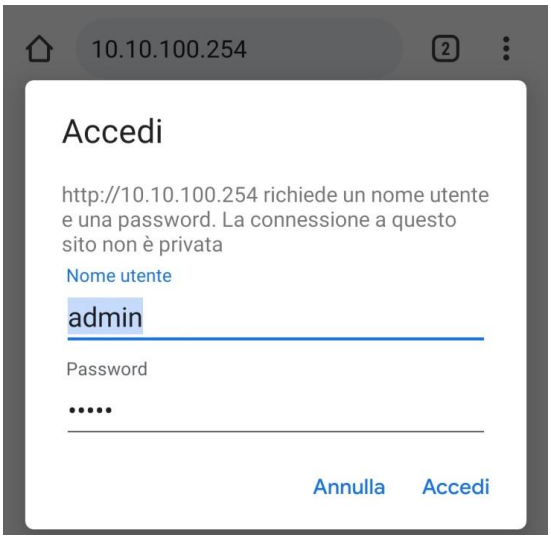

Figure 9 – Screen for accessing the web server to configure the Wi-Fi card

5) The status screen will open, showing the logger information such as the serial number and firmware version.
Check that the Inverter Information fields are filled in with the inverter information.

The language of the page can be changed using the command in the top right-hand corner.

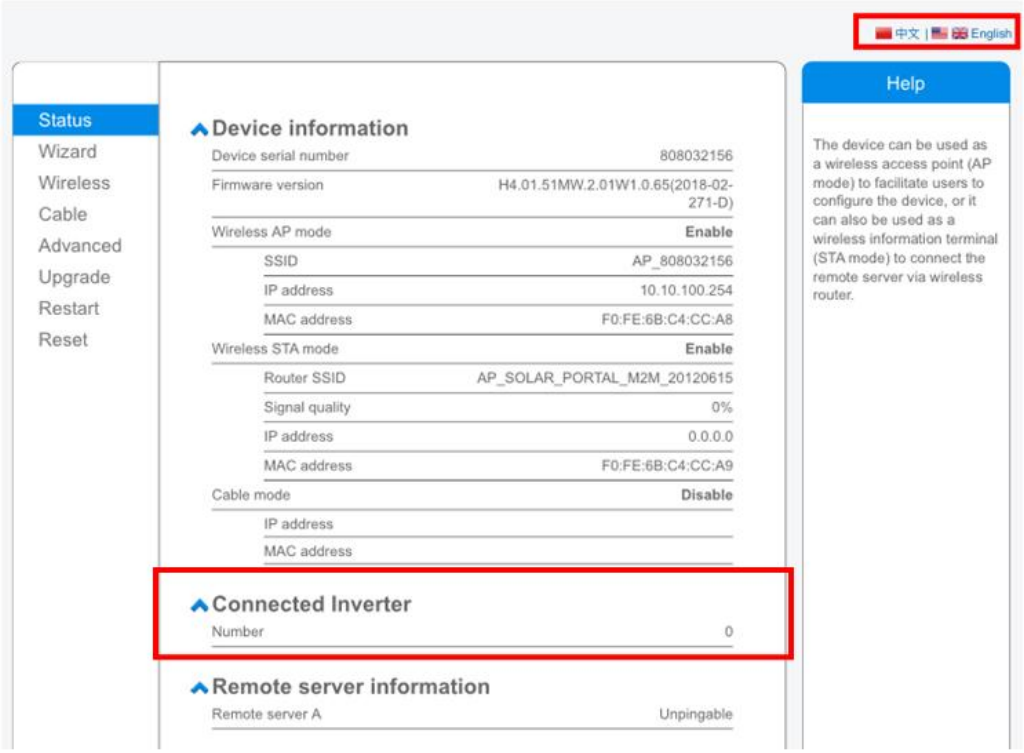

Figure 10 – Status screen

6) Click on the Wizard setup button in the left-hand column.
   In the new screen that opens, select the Wi-Fi network to which you want to connect the Wi-Fi card, making sure that the Received Signal Strength Indicator (RSSI) is greater than 30%. If the network is not visible, press the Refresh button.

   Note: check that the signal strength is greater than 30%; if not, make sure the antenna has been fully extracted by following the three steps shown in the figure.

   If the antenna has been correctly extracted, bring the router closer or install a repeater or signal amplifier.

   Click Next.

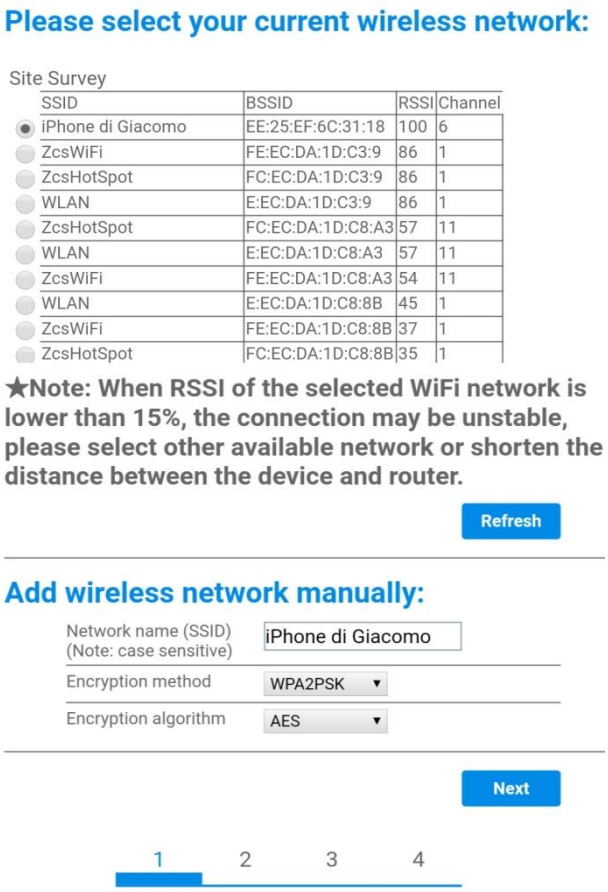

Figure 11 – Screen for selecting the available wireless network (1)

7) Enter the password of the Wi-Fi network (Wi-Fi modem), clicking on Show Password to make sure it is correct; the password should not contain special characters (&, #, %) and spaces.
   Note: During this step, the system is not able to ensure that the password entered is the one actually requested by the modem, therefore please make sure you enter the correct password.
   Also check that the box below is set to Enable.
   Then click "Next" and wait a few seconds for verification.

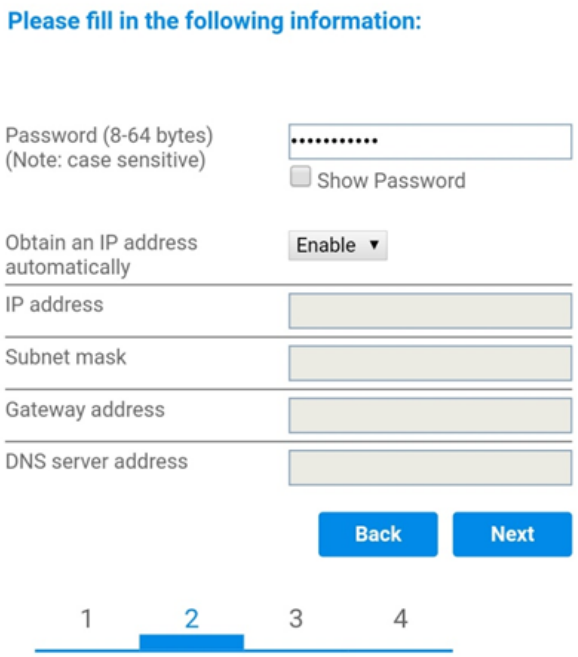

Figure 12 – Screen for entering the password of the wireless network (2)

8) Click "Next" again without ticking any of the options relating to the card security.

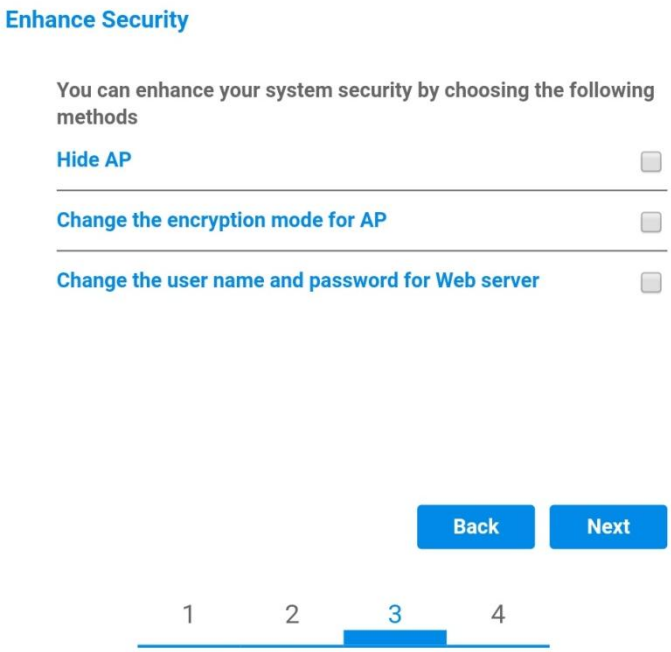

Figure 13 - Screen for setting the security options (3)

9) Click “OK”.

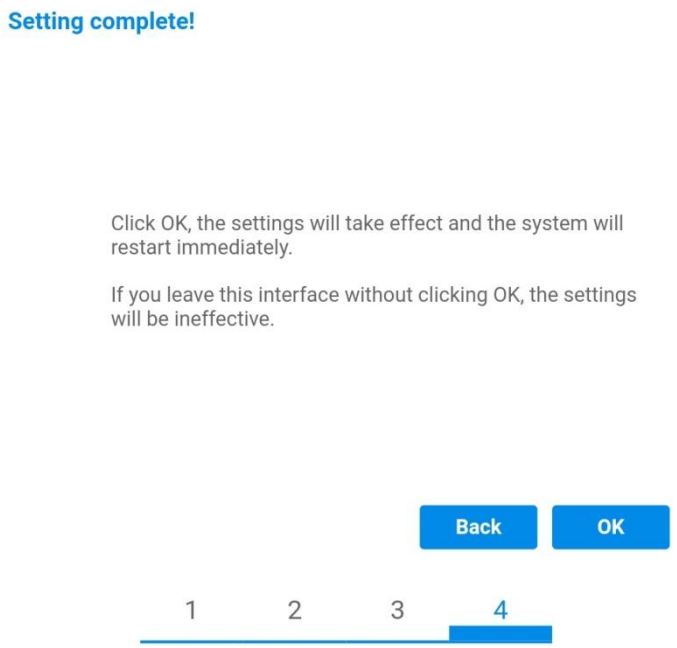

Figure 14 – Final configuration screen (4)

10) If the configuration procedure is successful, the following screen will appear.
If this screen does not appear, try refreshing the browser page.

The screen will prompt you to manually close the page; close the page from the background of your telephone or from the close key on your PC.

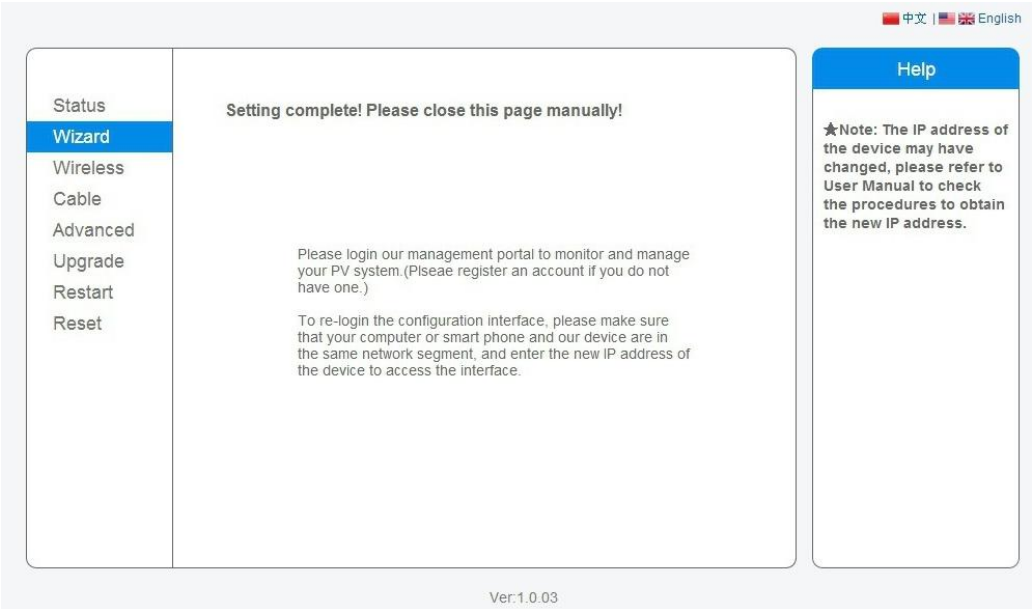

Figure 15 – Successful configuration screen

1.3. Verification

Wait two minutes after completing the card configuration.

Enter the IP address 10.10.100.254 again, and the login credentials ("admin" for both username and password). Once logged in, the following screen will appear; from here, check the following information:

- Wireless STA mode
  - Router SSID > Router name
  - Signal Quality > other than 0%
  - IP address > other than 0.0.0.0

- Remote server information
  - Remote server A > Pingable

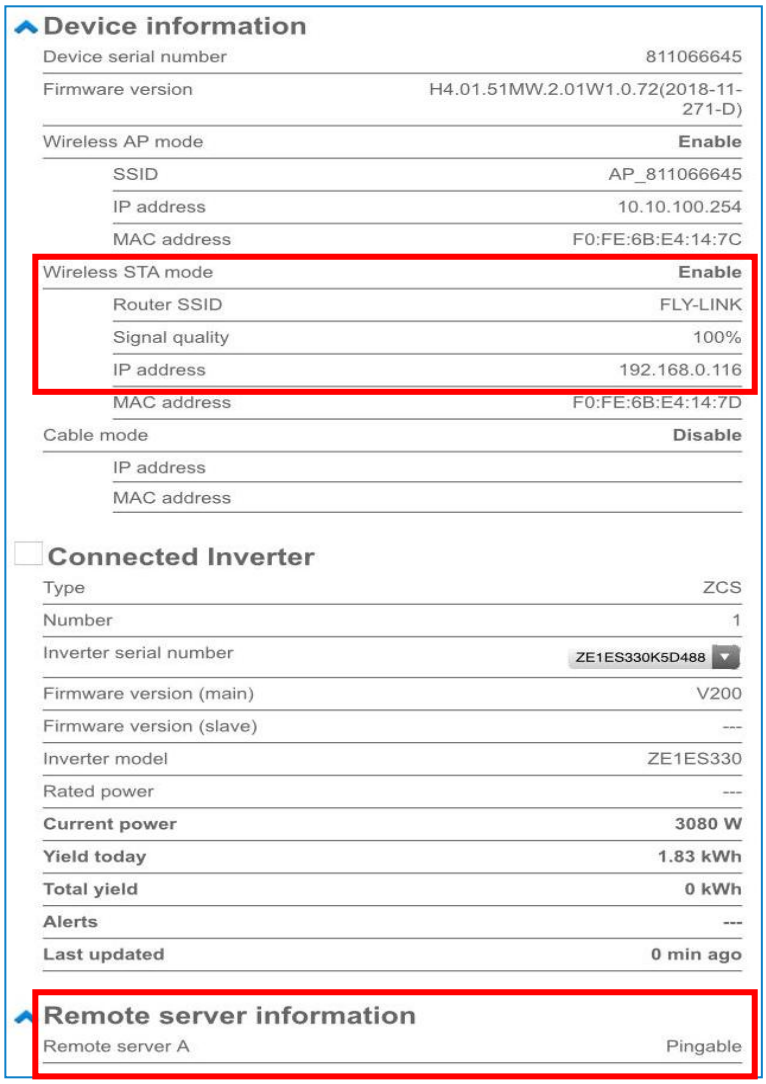

Device information

Device serial number	811066645
Firmware version	H4.01.51MW.2.01W1.0.72(2018-11-271-D)
Wireless AP mode	**Enable**
SSID	AP_811066645
IP address	10.10.100.254
MAC address	F0:FE:6B:E4:14:7C
Wireless STA mode	**Enable**
Router SSID	FLY-LINK
Signal quality	100%
IP address	192.168.0.116
MAC address	F0:FE:6B:E4:14:7D
Cable mode	**Disable**
IP address	
MAC address	

Connected Inverter

Type	ZCS
Number	1
Inverter serial number	ZE1ES330K5D488
Firmware version (main)	V200
Firmware version (slave)	---
Inverter model	ZE1ES330
Rated power	---
Current power	**3080 W**
Yield today	**1.83 kWh**
Total yield	**0 kWh**
Alerts	---
Last updated	**0 min ago**

Remote server information

Remote server A	Pingable

Figure 16 - Main screen of status and verification of correct configuration

If the Remote Server A item in the Status page is still “Unpingable”, the configuration was not successful, i.e. the wrong router password was entered or the device was disconnected during connection.

It is necessary to reset the card:

- Select Reset in the left-hand column.
- Press OK to confirm.
- Close the web page and enter the Status page again. At this point, the configuration procedure can be repeated again.

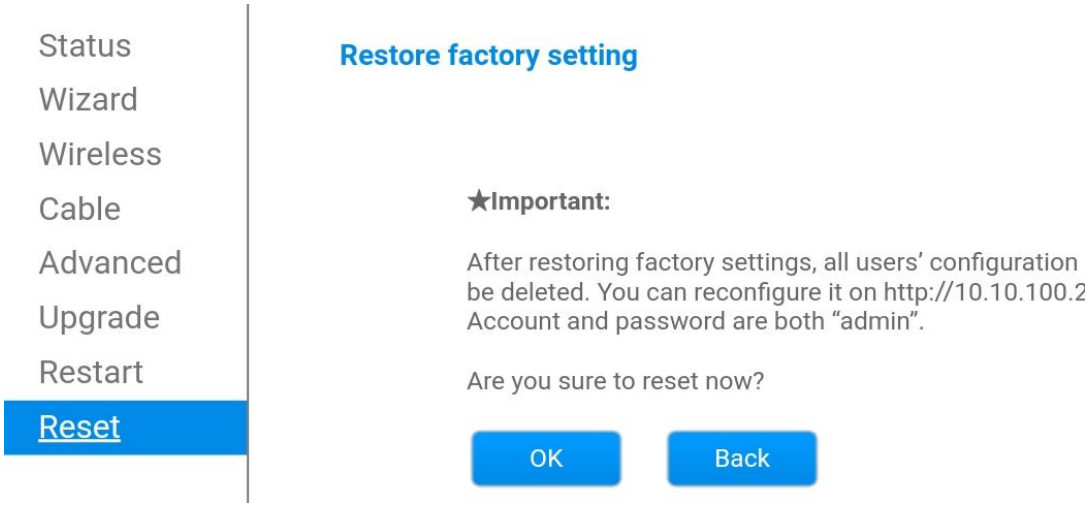

Figure 17 – Reset screen

1.4. Troubleshooting

1. The AP_******** Wi-Fi network generated by the card installed on the inverter is not visible

- Check the Modbus address set on the inverter:
  Enter the main menu with the ESC key (first key on the left), go to System Info and press ENTER to enter the submenu. Scroll down to the Modbus address parameter and make sure it is set to 01 (and in any case, other than 00).

  If the value set is different from 01, go to Settings and enter the Modbus Address menu where the 01 value can be set.

- Check that the card is correctly connected to the mechanics of the inverter.
  If necessary, disconnect the card from its slot and insert again.

- Check that the Wi-Fi symbol is present in the top right-hand corner of the inverter's display (steady or flashing).

Figure 18 – Icon on the display of inverters

2. The Signal Quality is 0% and the IP Address is 0.0.0.0

- Check that the configuration procedure has been carried out correctly and that the correct network password has been entered.
- Reset the card as described in the previous section and configure again.

3. The Remote Server A item is Unpingable

- When searching for the Wi-Fi network using a smartphone or PC, make sure that the Wi-Fi signal is strong enough (a minimum RSSI signal strength of 30% is required during configuration). Check that you have correctly extracted the Wi-Fi antenna and, if necessary, increase the signal strength by using a network extender or a router dedicated to monitoring the inverter.
- Check that the router has access to the network and that the connection is stable; check that it is possible to access the Internet from a PC or smartphone.
- Check that port 80 of the router is open and enabled to send data
- Reset the card as described in the previous section and configure again.
- If, at the end of the previous checks and subsequent configuration, Remote server A is still configured to “Unpingable”, then there may be a transmission problem at the home network level and, specifically, that data between the router and server is not being transmitted correctly. In this case, it is advisable to carry out checks at the router level in order to ensure that there are no obstructions on the output of data packets to our server.
- To make sure that the problem lies in the home router and to exclude problems with the Wi-Fi card, configure the card using the Wi-Fi hotspot function on your smartphone as a reference wireless network.

- **Using an Android mobile phone as a modem**

  a) Check that the 3G/LTE connection is active on your smartphone. Go to the Settings menu of the operating system (the gear icon on the screen with a list of all the apps installed on the phone), select "Other" from the Wireless and networks menu and make sure that the Network type is set to 3G/4G/5G.

  b) In the Android settings menu, go to Wireless & networks > Other. Select Mobile Hotspot/Tethering, and then enable the Wi-Fi mobile hotspot option; wait a few seconds for the wireless network to be created. To change the name of the wireless network (SSID) or your password, select Configure Wi-Fi hotspot.

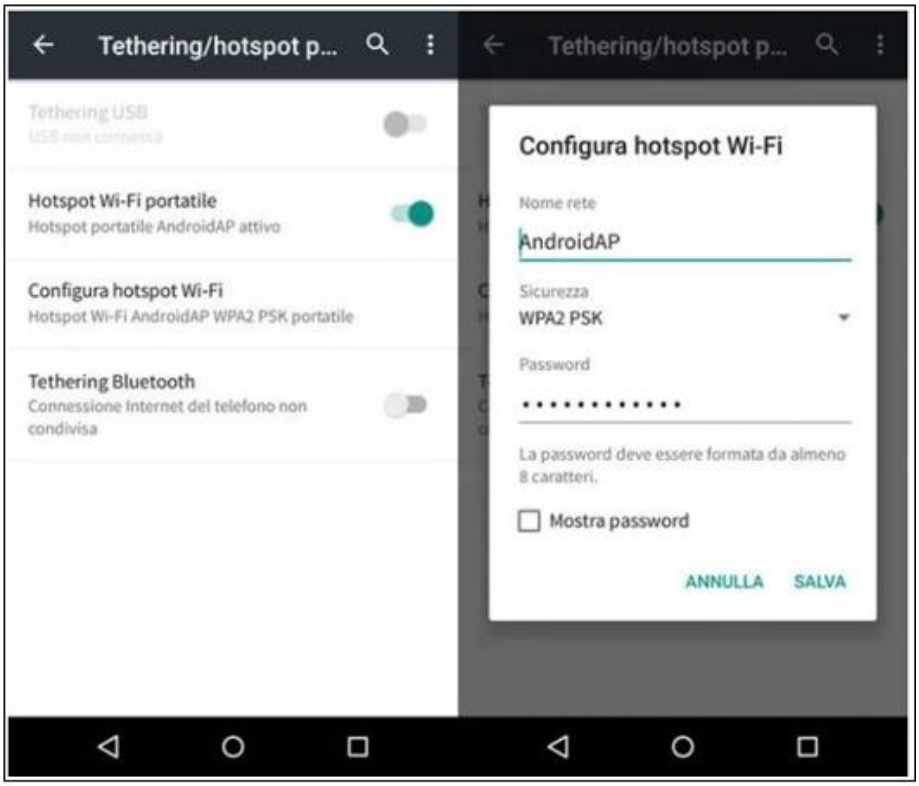

Figure 19 – Configuration of an Android smartphone as a hotspot router

- **Using an iPhone as a modem**

  a) In order to share the iPhone connection, verify that the 3G/LTE network is active by going to Settings > Mobile Phone, and making sure that the "Voice and data" option is set to 5G, 4G or 3G. To enter the iOS settings menu, click the grey gear icon on the home screen of your phone.

  b) Go to the Settings menu > Personal Hotspot and turn on the Personal Hotspot option. The hotspot is now enabled. To change the password of the Wi-Fi network, select Wi-Fi password from the personal hotspot menu.

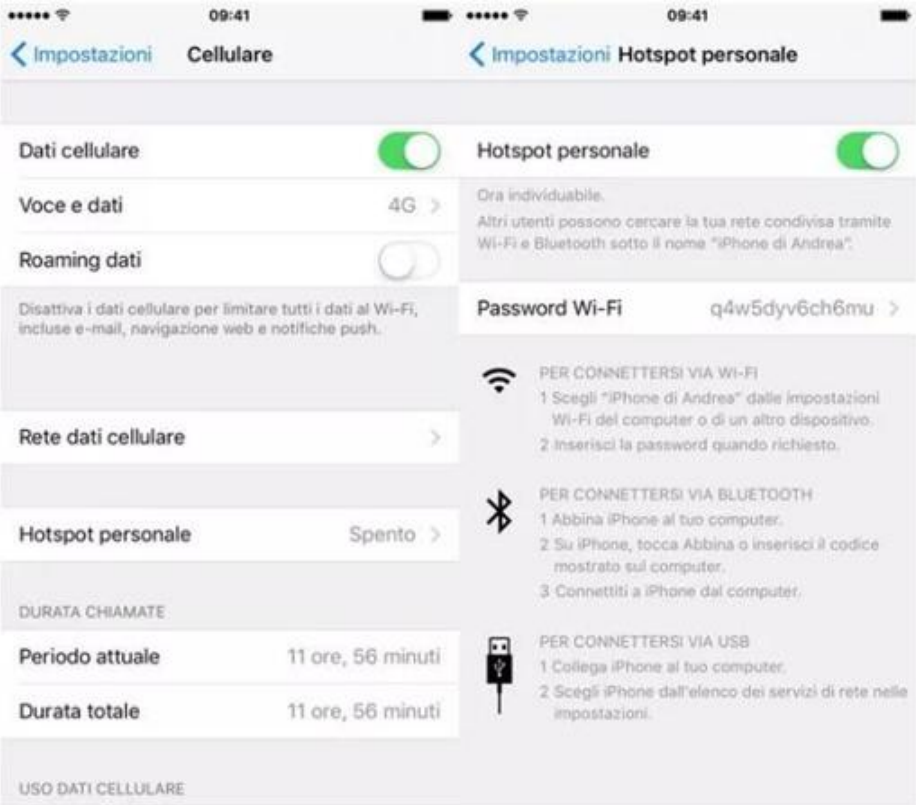

Figure 20 - Configuration of an iOS smartphone as a hotspot router

At this point, it is necessary to re-configure the Wi-Fi card using a PC or smartphone other than the one used as a modem.
During this procedure, when asked to select the Wi-Fi network, choose the one activated by the smartphone and then enter the password associated with it (which can be changed from the personal hotspot settings). If at the end of the configuration the word "Unpingable" appears next to "Remote Server A", then the problem depends on the home router.
It is therefore advisable to check the brand and model of the home router you are trying to connect to the Wi-Fi card; some router brands may have closed communication ports. In this case, contact the customer service of the router's manufacturer and ask them to open port 80 (direct from the network to external users).

2. External Wi-Fi adapter

2.1. Installation

Unlike the internal Wi-Fi card, the external adapter must be installed for all compatible inverters. However, the procedure is quicker and easier as there is no need to open the front cover of the inverter.

<u>In order to monitor the inverter, the RS485 communication address must be set to 01 directly from the display.</u>

Installation tools:

- Cross screwdriver
- External Wi-Fi adapter

1) Switch off the inverter following the procedure described in this manual.
2) Remove the cover for accessing the Wi-Fi connector on the bottom of the inverter by unscrewing the two cross-head screws (a), or by unscrewing the cover (b), as shown in the figure.

(a)

(b)

Figure 21 – Port for external Wi-Fi adapter

3) Connect the Wi-Fi adapter to the appropriate port, making sure to follow the direction of the connection and ensure correct contact between the two parts.

(a)

(b)

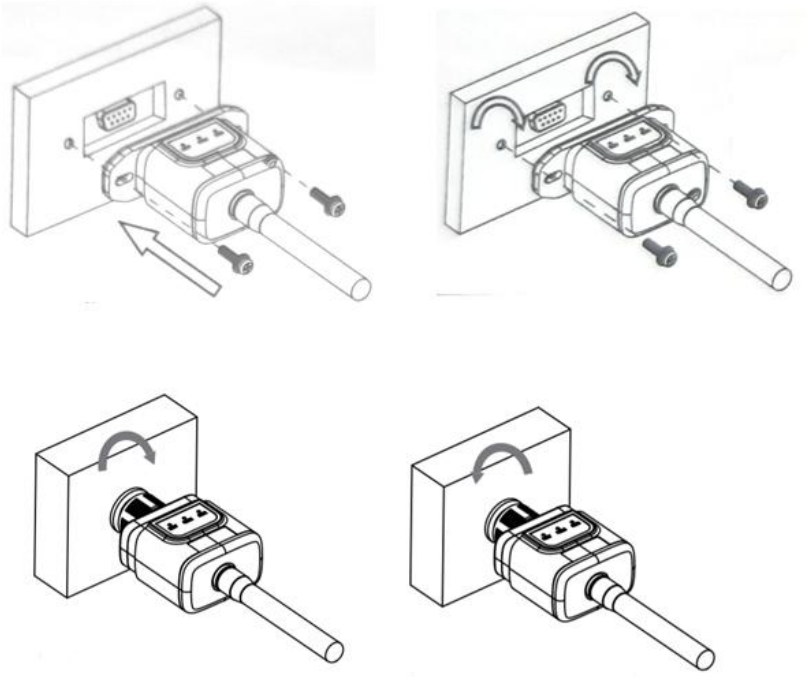

Figure 22 – Inserting and securing the external Wi-Fi adapter

4) Switch on the inverter by following the procedure described in the manual.

2.2. Configuration

Configuration of the Wi-Fi adapter requires the presence of a Wi-Fi network near the inverter in order to achieve stable transmission of data from the inverter adapter to the Wi-Fi modem.

Tools required for configuration:

- Smartphone, PC or tablet

Go to front of the inverter and search for the Wi-Fi network using a smartphone, PC or tablet, making sure that the signal from the home Wi-Fi network reaches the place where the inverter is installed.
If the Wi-Fi signal is present at the location where the inverter is installed, the configuration procedure can begin.
If the Wi-Fi signal does not reach the inverter, a system must be installed to amplify the signal and bring it to the installation location.

1) Activate the search for the Wi-Fi networks on your telephone or PC so that all the networks visible by your device are displayed.

Figure 23 - Search for Wi-Fi networks on iOS smartphone (left) and Android smartphone (right)

Note: Disconnect from any Wi-Fi networks to which you are connected by removing automatic access.

Figure 24 – Disabling automatic reconnection to a network

2) Connect to a Wi-Fi network generated by the inverter's Wi-Fi adapter (i.e. AP_*******, where ******* indicates the serial number of the Wi-Fi adapter shown on the label of the device), which operates as an access point.

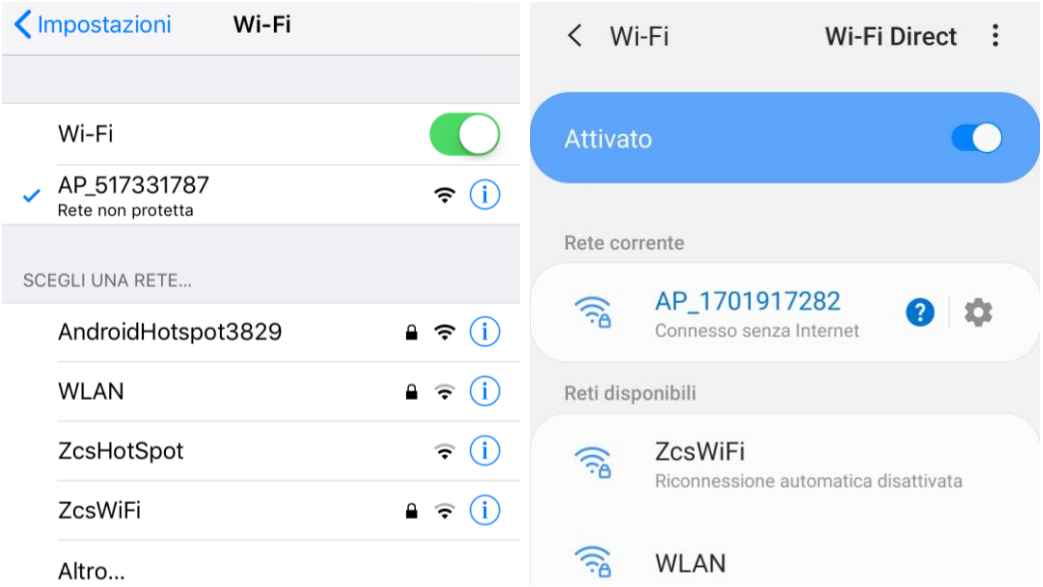

Figure 25 - Connection to Access Point for Wi-Fi adapter on iOS smartphone (left) and Android smartphone (right)

3) If you are using a second-generation Wi-Fi adapter, you will be prompted for a password to connect to the inverter's Wi-Fi network. Use the password found on the box or on the Wi-Fi adapter.

Figure 26 – Password of external Wi-Fi adapter

Note: To ensure that the adapter is connected to the PC or smartphone during the configuration procedure, enable automatic reconnection of the AP_******* network.

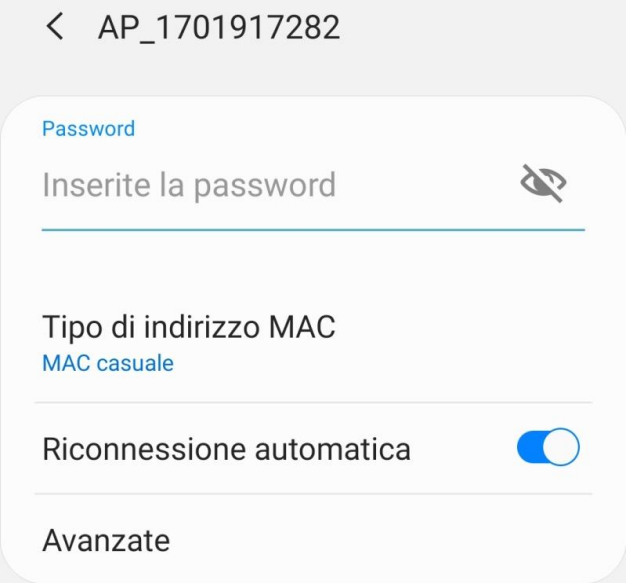

Figure 27 – Password entry prompt

Note: the Access Point is not able to provide internet access; confirm to maintain the Wi-Fi connection, even if the internet is not available

Figure 28 – Screen indicating that the Internet cannot be accessed

4) Open a browser (Google Chrome, Safari, Firefox) and enter the IP address 10.10.100.254 in the address bar at the top of the screen.
   In the box that appears, enter “admin” as both the Username and Password.

Figure 29 – Screen for accessing the web server to configure the Wi-Fi adapter

5) The status screen will open, showing the logger information such as the serial number and firmware version.

   Check that the Inverter Information fields are filled in with the inverter information.

   The language of the page can be changed using the command in the top right-hand corner.

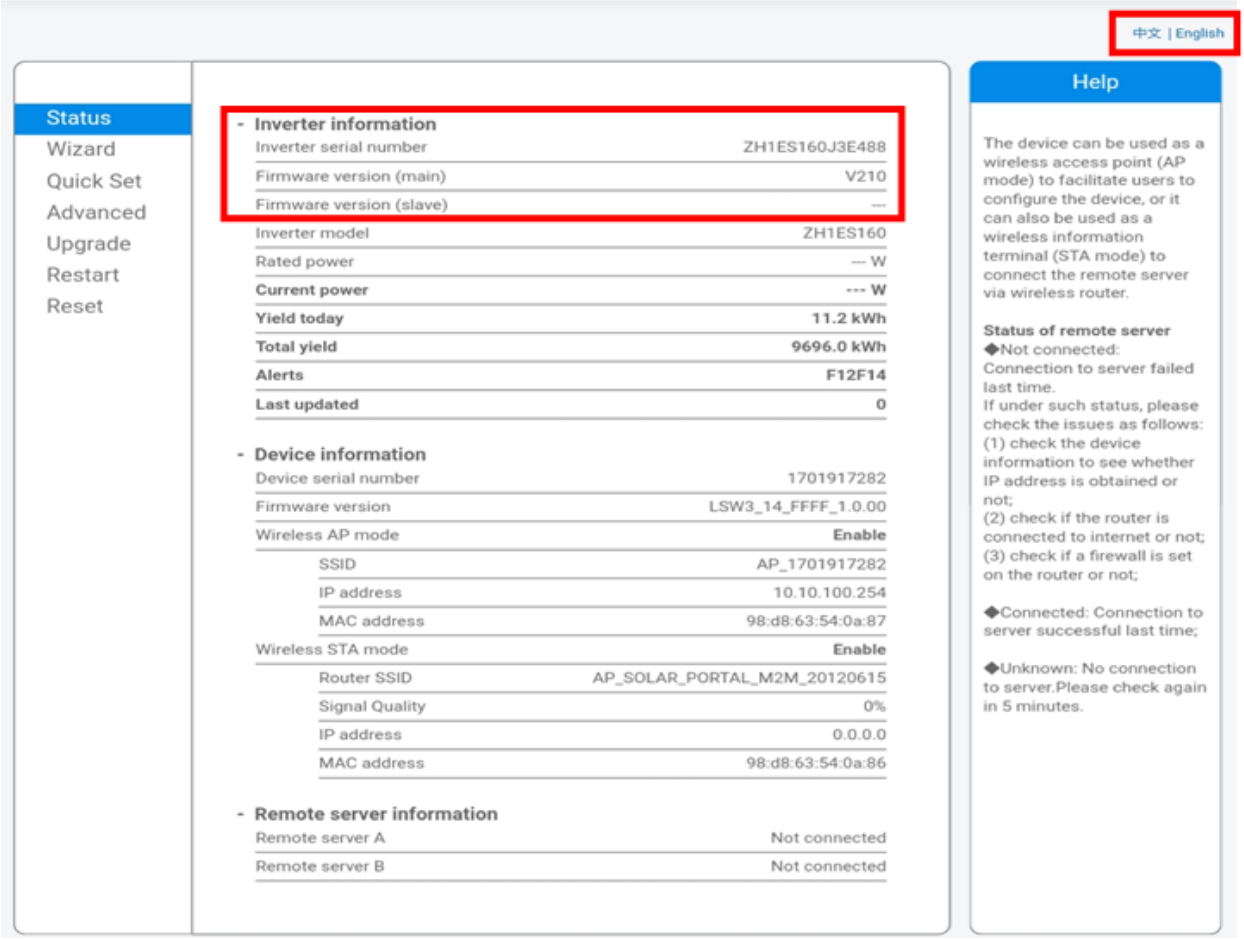

Figure 30 – Status screen

6) Click on the Wizard setup button in the left-hand column.

7) In the new screen that opens, select the Wi-Fi network to which you want to connect the Wi-Fi adapter, making sure that the Received Signal Strength Indicator (RSSI) is greater than 30%. If the network is not visible, press the Refresh button.
Note: check that the signal strength is greater than 30%, if not, bring the router closer or install a repeater or signal amplifier.
Click Next.

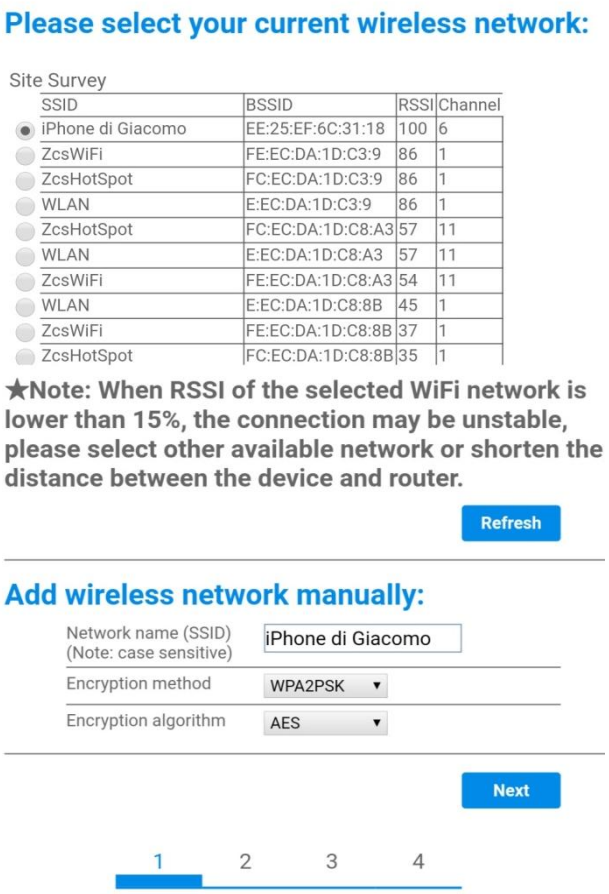

Figure 31 – Screen for selecting the available wireless network (1)

8) Enter the password of the Wi-Fi network (Wi-Fi modem), clicking on Show Password to make sure it is correct; the password should not contain special characters (&, #, %) and spaces.
   Note: During this step, the system is not able to ensure that the password entered is the one actually requested by the modem, therefore please make sure you enter the correct password.
   Also check that the box below is set to Enable.
   Then click "Next" and wait a few seconds for verification.

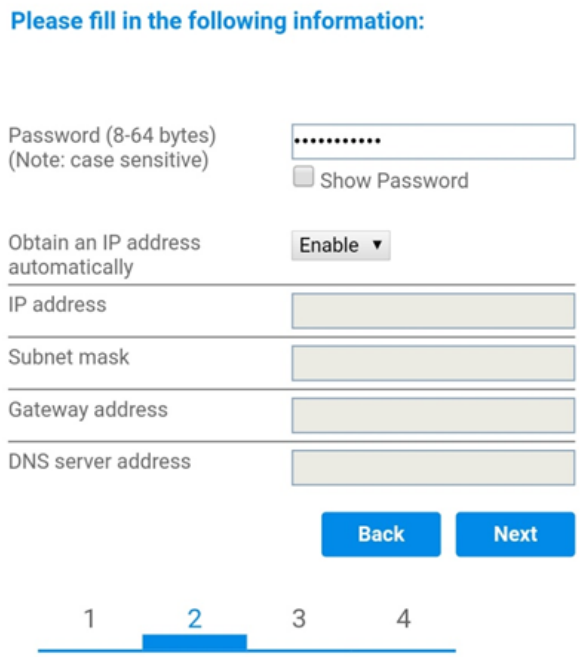

Figure 32 – Screen for entering the password of the wireless network (2)

9) Click "Next" again without ticking any of the options relating to the system security.

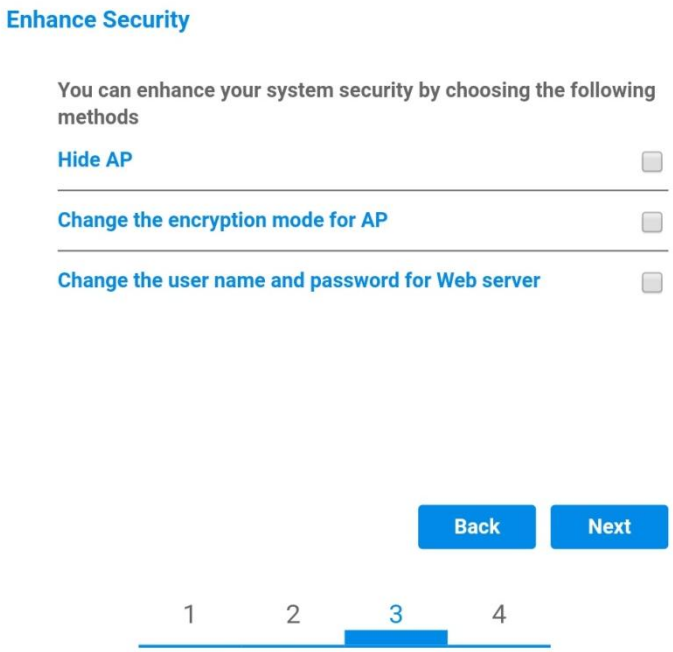

Figure 33 - Screen for setting the security options (3)

10) Click “OK”.

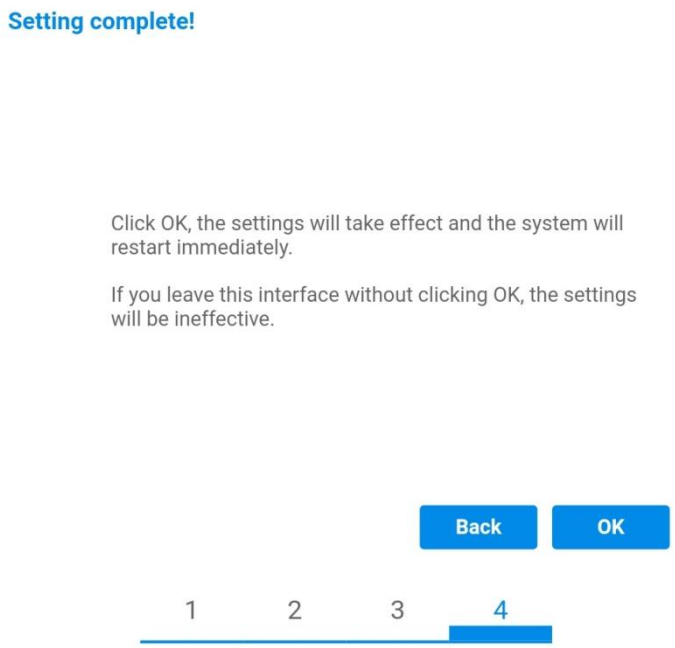

Figure 34 – Final configuration screen (4)

11) At this point, if the configuration of the adapter is successful, the last configuration screen will appear, and the telephone or PC will unpair from the inverter’s Wi-Fi network.
12) Manually close the web page with the Close key on the PC por remove it from the background of the telephone.

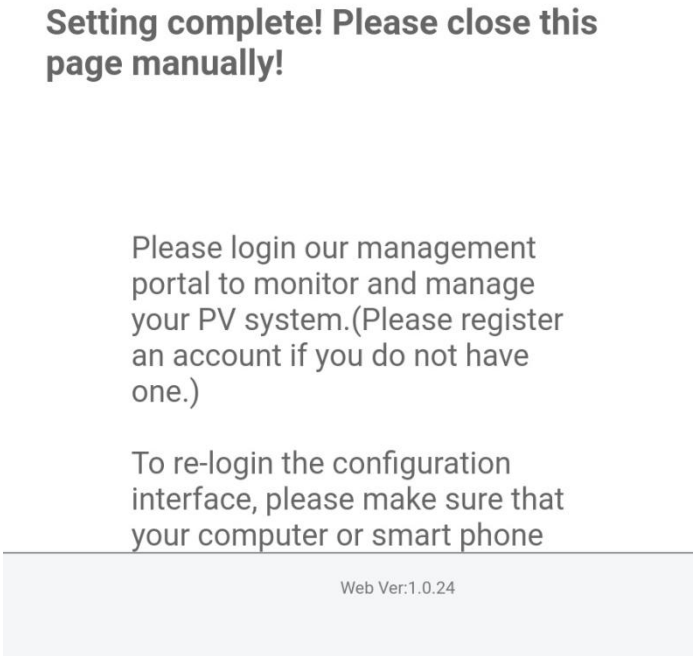

Figure 35 - Successful configuration screen

2.3. Verification

Wait two minutes after configuring the adapter and then go back to the Wi-Fi network selection screen to verify that the AP_******* network is no longer present. The absence of the Wi-Fi network in the list will confirm the successful configuration of the Wi-Fi adapter.

Figure 36 – Wi-Fi network search on Smartphone (iOS and Android); Access point of the Wi-Fi adapter is no longer visible

If the Wi-Fi network is still present in the list, connect to it again and enter the status page. Check the following information:

a. Wireless STA mode
   i. Router SSID > Router name
   ii. Signal Quality > other than 0%
   iii. IP address > other than 0.0.0.0
b. Remote server information
   i. Remote server A > Connected

Figure 37 – Status screen

Status of LEDs present on the adapter

1) Initial status:
   NET (left LED): off
   COM (central LED): steady on
   READY (right LED): flashing on

Figure 38 - Initial status of LEDs

2) Final status:
   NET (left LED): steady on
   COM (central LED): steady on
   READY (right LED): flashing on

Figure 39 - Final status of LEDs

If the NET LED does not light up or if the Remote Server A option in the Status page still shows “Not Connected”, the configuration was not successful, i.e. the wrong router password was entered or the device was disconnected during connection.

It is necessary to reset the adapter:

- Press the Reset button for 10 seconds and release
- After a few seconds, the LEDs will turn off and READY will start to flash quickly
- The adapter has now returned to its initial state. At this point, the configuration procedure can be repeated again.

The adapter can only be reset when the inverter is switched on.

Figure 40 – Reset button on the Wi-Fi adapter

2.4. Troubleshooting

Status of LEDs present on the adapter

1) Irregular communication with inverter
- NET (left LED): steady on
- COM (central LED): off
- READY (right LED): flashing on

Figure 41 - Irregular communication status between inverter and Wi-Fi

- Check the Modbus address set on the inverter:

Enter the main menu with the ESC key (first key on the left), go to System Info and press ENTER to enter the submenu. Scroll down to the Modbus address parameter and make sure it is set to 01 (and in any case, other than 00).

If the value is not 01, go to "Settings" (basic settings for hybrid inverters) and enter the Modbus Address menu where the 01 value can be set.

- Check that the Wi-Fi adapter is correctly and securely connected to the inverter, making sure to tighten the two cross-head screws provided.

- Check that the Wi-Fi symbol is present in the top right-hand corner of the inverter's display (steady or flashing).

Figure 42 – Icons on the display of LITE single-phase inverters (left) and three-phase or hybrid inverters (right)

- Restart the adapter:
  - Press the reset button for 5 seconds and release
  - After a few seconds, the LEDs will turn off and will start to flash quickly
  - The adapter will now be reset without having lost the configuration with the router

2) Irregular communication with remote server
- NET (left LED): off
- COM (central LED): on
- READY (right LED): flashing on

Figure 43 - Irregular communication status between Wi-Fi and remote server

- Check that the configuration procedure has been carried out correctly and that the correct network password has been entered.
- When searching for the Wi-Fi network using a smartphone or PC, make sure that the Wi-Fi signal is strong enough (a minimum RSSI signal strength of 30% is required during configuration). If necessary, increase it by using a network extender or a router dedicated to inverter monitoring.
- Check that the router has access to the network and that the connection is stable; check that a PC or smartphone can access the Internet
- Check that port 80 of the router is open and enabled to send data
- Reset the adapter as described in the previous section

If, at the end of the previous checks and subsequent configuration, Remote server A is still "Not Connected" or the NET LED is off, there may be a transmission problem at the home network level and, more specifically, that data between the router and server is not being transmitted correctly. In this case, it is advisable to carry out checks at the router level in order to ensure that there are no obstructions on the output of data packets to our server.
To make sure that the problem lies in the home router and to exclude problems with the Wi-Fi adapter, configure the adapter using the Wi-Fi hotspot function on your smartphone as a reference wireless network.

- **Using an Android mobile phone as a modem**

  a) Check that the 3G/LTE connection is active on your smartphone. Go to the Settings menu of the operating system (the gear icon on the screen with a list of all the apps installed on the phone), select "Other" from the Wireless and networks menu and make sure that the Network type is set to 3G/4G/5G.

  b) In the Android settings menu, go to Wireless & networks > Other. Select Mobile Hotspot/Tethering, and then enable the Wi-Fi mobile hotspot option; wait a few seconds for the wireless network to be created. To change the name of the wireless network (SSID) or your password, select Configure Wi-Fi hotspot.

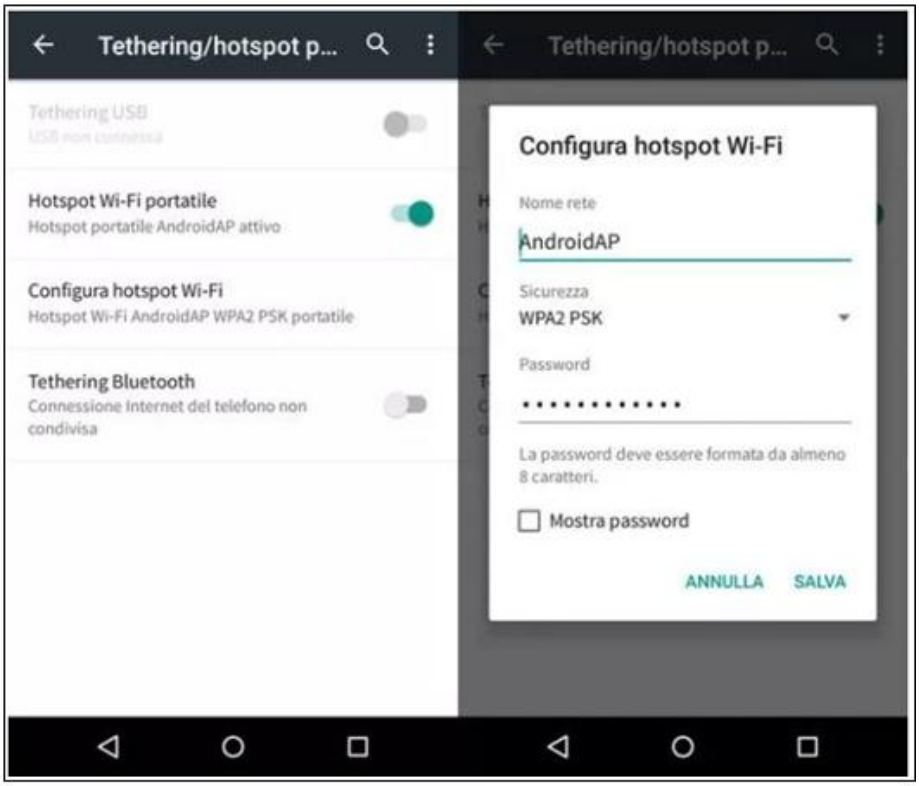

Figure 44 – Configuration of an Android smartphone as a hotspot router

- **Using an iPhone as a modem**

  a) In order to share the iPhone connection, verify that the 3G/LTE network is active by going to Settings > Mobile Phone, and making sure that the "Voice and data" option is set to 5G, 4G or 3G. To enter the iOS settings menu, click the grey gear icon on the home screen of your phone.

  b) Go to the Settings menu > Personal Hotspot and turn on the Personal Hotspot option. The hotspot is now enabled. To change the password of the Wi-Fi network, select Wi-Fi password from the personal hotspot menu.

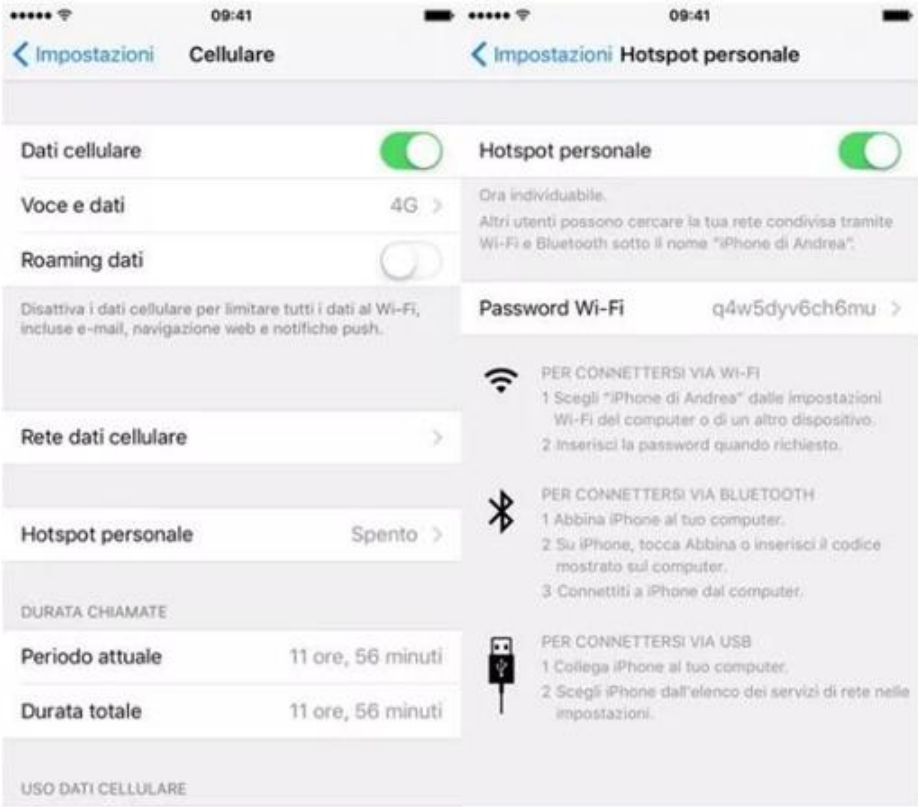

Figure 45 - Configuration of an iOS smartphone as a hotspot router

At this point, it is necessary to re-configure the Wi-Fi adapter using a PC or smartphone other than the one used as a modem.
During this procedure, when asked to select the Wi-Fi network, choose the one activated by the smartphone and then enter the password associated with it (which can be changed from the personal hotspot settings). If at the end of configuration, "Connected" appears next to "Remote Server A", then the problem is with the home router.
It is therefore advisable to check the brand and model of the home router you are trying to connect to the Wi-Fi adapter; some router brands may have closed communication ports. In this case, contact the customer service of the router's manufacturer and ask them to open port 80 (direct from the network to external users).

3. Ethernet adapter

3.1. Installation

Installation must be carried out for all inverters compatible with the adapter. However, the procedure is quicker and easier as there is no need to open the front cover of the inverter. Proper operation of the device requires the presence of a modem correctly connected to the network and in operation in order to achieve stable data transmission from the inverter to the server.

<u>In order to monitor the inverter, the RS485 communication address must be set to 01 directly from the display.</u>

Installation tools:

- Cross screwdriver
- Ethernet adapter
- Shielded network (Cat. 5 or Cat. 6) crimped with RJ45 connectors

1) Switch off the inverter following the procedure described in this manual.
2) Remove the cover for accessing the Wi-Fi/Eth connector on the bottom of the inverter by unscrewing the two cross-head screws (a), or by unscrewing the cover (b), depending on the inverter model, as shown in the figure.

(a)

(b)

Figure 46 – Port of the Ethernet adapter

3) Remove the ring nut and the waterproof cable gland from the adapter to allow the network cable to pass through; then insert the network cable network into the appropriate port on the inside of the adapter and tighten the ring nut and cable gland to ensure a stable connection.

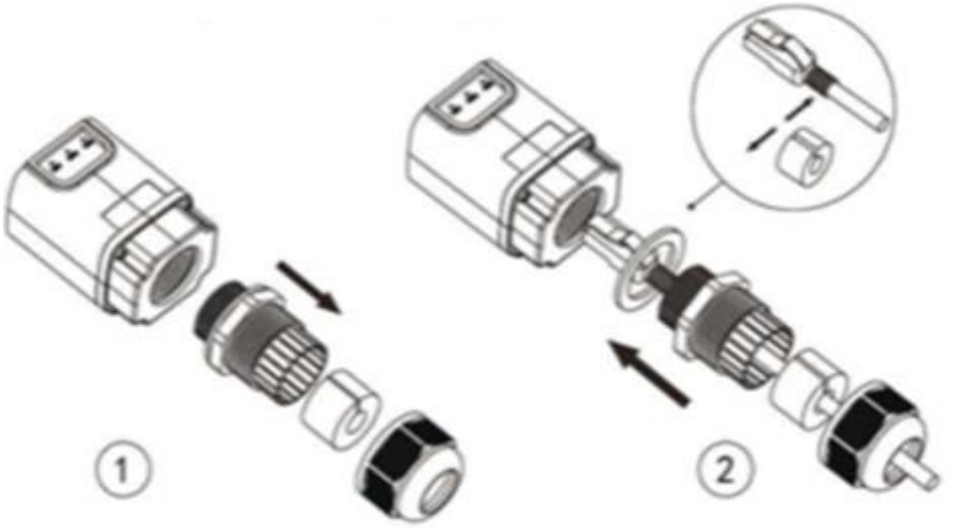

Figure 47 – Inserting the network cable inside the device

4) Connect the Ethernet adapter to the appropriate port, making sure to follow the direction of the connection and ensure correct contact between the two parts.

(a)

(b)

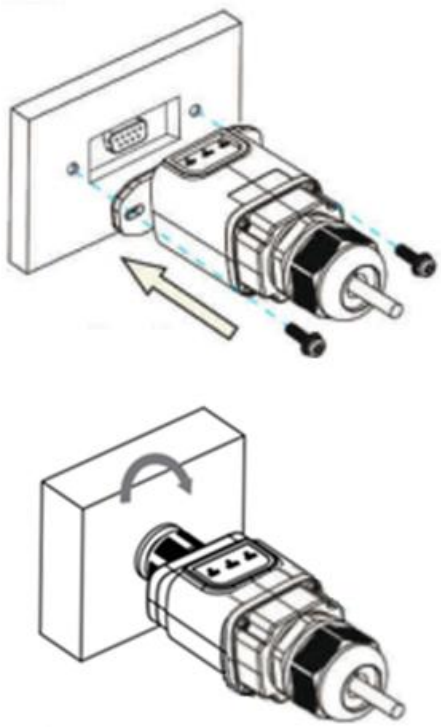

Figure 48 – Inserting and securing the ethernet adapter

5) Connect the other end of the network cable to the ETH output (or equivalent) of the modem or a suitable data transmission device.

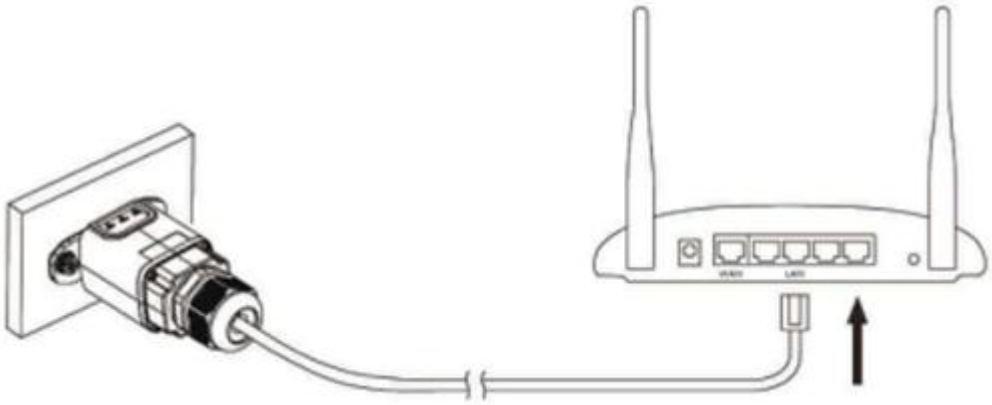

Figure 49 – Connecting the network cable to the modem

6) Switch on the inverter by following the procedure described in the manual.

7) Unlike Wi-Fi cards, the Ethernet adapter does not need to be configured and starts transmitting data shortly after the inverter is switched on.

3.2. Verification

Wait two minutes after installing the adapter, and check the status of the LEDs on the device.

Status of LEDs present on the adapter

1) Initial status:
   NET (left LED): off
   COM (central LED): steady on
   SER (right LED): flashing on

Figure 50 - Initial status of LEDs

2) Final status:
   NET (left LED): steady on
   COM (central LED): steady on
   SER (right LED): flashing on

Figure 51 - Final status of LEDs

3.3. Troubleshooting

Status of LEDs present on the adapter

1) Irregular communication with inverter

- NET (left LED): steady on
- COM (central LED): off
- SER (right LED): flashing on

Figure 52 - Irregular communication status between the inverter and adapter

- Check the Modbus address set on the inverter:
  Enter the main menu with the ESC key (first key on the left), go to System Info and press ENTER to enter the submenu. Scroll down to the Modbus address parameter and make sure it is set to 01 (and in any case, other than 00).
  If the value is not 01, go to "Settings" (basic settings for hybrid inverters) and enter the Modbus Address menu where the 01 value can be set.
- Check that the Ethernet adapter is correctly and securely connected to the inverter, making sure to tighten the two cross-head screws provided. Check that the network cable is correctly inserted into the device and modem, and that the RJ45 connector is correctly crimped.

2) Irregular communication with remote server

- NET (left LED): off
- COM (central LED): on
- SER (right LED): flashing on

Figure 53 - Irregular communication status between the adapter and remote server

- Check that the router has access to the network and that the connection is stable; check that a PC can access the Internet

  Check that port 80 of the router is open and enabled to send data.
  It is advisable to check the brand and model of the home router you are trying to connect to the Ethernet adapter; some router brands may have closed communication ports. In this case, contact the customer service of the router's manufacturer and ask them to open port 80 (direct from the network to external users).

4. 4G adapter

The ZCS 4G adapters are sold with a virtual SIM integrated into the device with data traffic fee included for10 years, which is adequate for the proper transmission of data to monitor the inverter.

<u>In order to monitor the inverter, the RS485 communication address must be set to 01 directly from the display.</u>

4.1. Installation

Installation must be carried out for all inverters compatible with the adapter. However, the procedure is quicker and easier as there is no need to open the front cover of the inverter.

Installation tools:

- Cross screwdriver
- 4G adapter

1) Switch off the inverter following the procedure described in this manual.
2) Remove the cover for accessing the Wi-Fi/ GPRS connector on the bottom of the inverter by unscrewing the two cross-head screws (a), or by unscrewing the cover (b), depending on the inverter model, as shown in the figure.

(a)

(b)

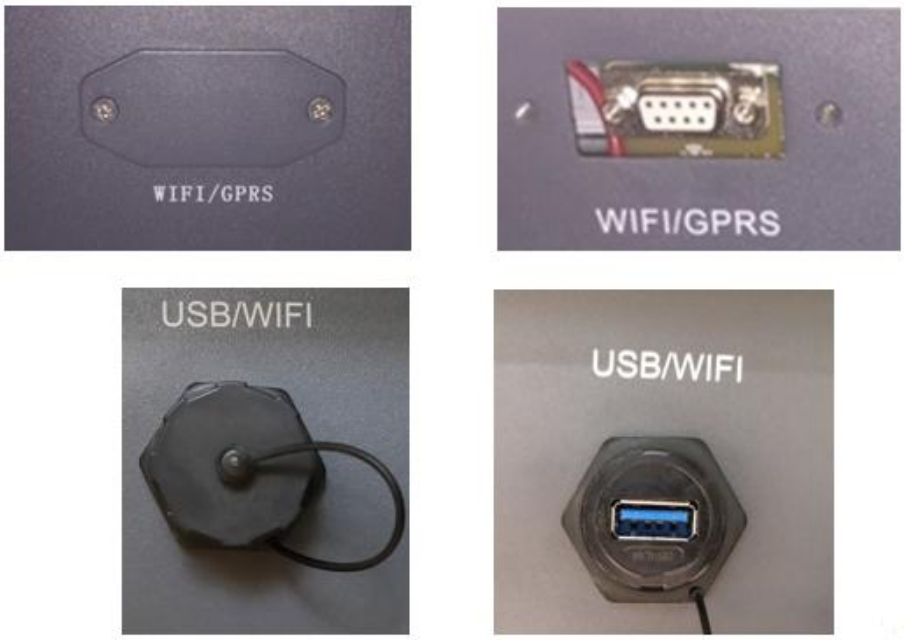

Figure 54 – Port of the 4G adapter

3) Insert the 4G adapter into the appropriate port, making sure to follow the direction of the connection and ensure correct contact between the two parts. Secure the 4G adapter by tightening the two screws inside the package.

(a)

(b)

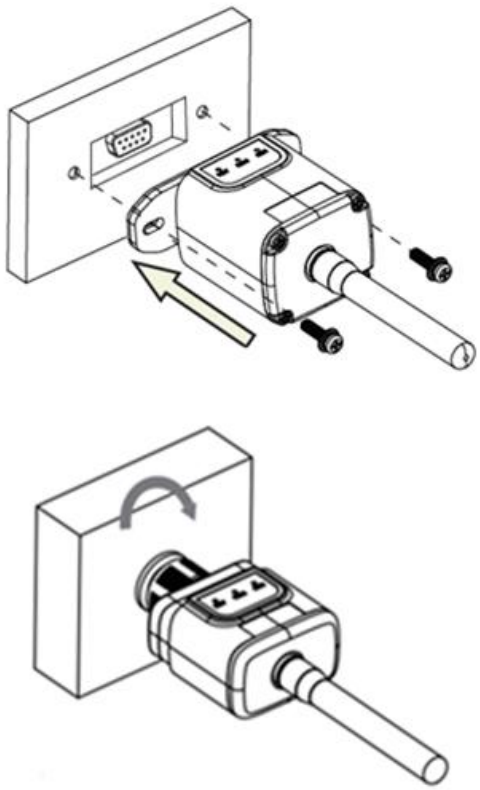

Figure 55 – Inserting and securing the 4G adapter

4) Switch on the inverter by following the procedure described in the manual.
5) Unlike Wi-Fi cards, the 4G adapter does not need to be configured and starts transmitting data shortly after the inverter is switched on.

4.2. Verification

After installing the adapter, within the next 3 minutes check the status of the LEDs on the device to ensure that the device is configured correctly.

Status of LEDs present on the adapter

1) Initial status:

- NET (left LED): off
- COM (central LED): flashing on
- SER (right LED): flashing on

Figure 56 - Initial status of LEDs

2) Registration:

- NET (left LED): flashes rapidly for about 50 seconds; the registration process takes about 30 seconds
- COM (central LED): flashes rapidly 3 times after 50 seconds

3) Final status (approx. 150 seconds after the inverter has started):

- NET (left LED): flashing on (off and on at equal intervals)
- COM (central LED): steady on
- SER (right LED): steady on

Figure 57 - Final status of LEDs

Status of LEDs present on the adapter

1) Irregular communication with inverter

- NET (left LED): on
- COM (central LED): off
- SER (right LED): on

Figure 58 - Irregular communication status between inverter and adapter

- Check the Modbus address set on the inverter:
  Enter the main menu with the ESC key (first key on the left), go to System Info and press ENTER to enter the submenu. Scroll down to the Modbus address parameter and make sure it is set to 01 (and in any case, other than 00).

  If the value is not 01, go to “Settings” (basic settings for hybrid inverters) and enter the Modbus Address menu where the 01 value can be set.

- Check that the 4G adapter is correctly and securely connected to the inverter, making sure to tighten the two cross-head screws provided.

2) Irregular communication with remote server:

- NET (left LED): flashing on
- COM (central LED): on
- SER (right LED): flashing on

Figure 59 - Irregular communication status between the adapter and remote server

- Check that the 4G signal is present in the installation location (the adapter uses the Vodafone network for 4G transmission; if this network is not present or the signal is weak, the SIM will use a different network or will limit the data transmission speed). Ensure that the installation location is suitable for 4G signal transmission and that there are no obstacles that could affect data transmission.

- Check the status of the 4G adapter and that there are no external signs of wear or damage.